OT5301

Bouchon filetage femelle.

Spécifications techniques

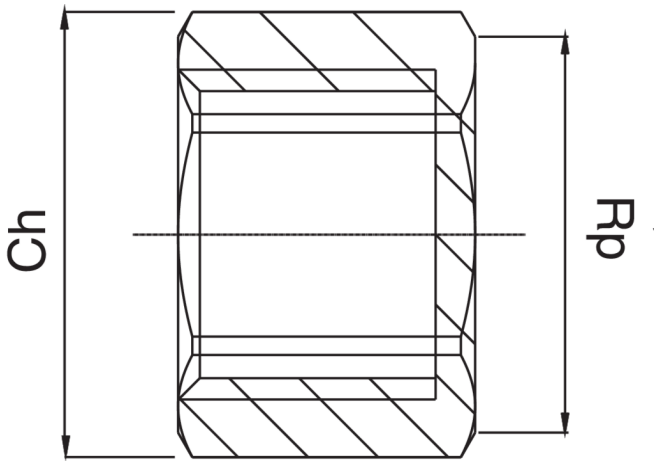

RP	BAG	MASTER BOX	CODE	CH
1/4"	10	100	OT5301A14000000	17
3/8"	10	300	OT5301A38000000	20
1/2"	10	300	OT5301A12000000	24
3/4"	10	200	OT5301A34000000	30
1"	10	150	OT5301B01000000	37
1"1/4	5	100	OT5301B14000000	46
1"1/2	5	70	OT5301B12000000	52
2"	5	50	OT5301C02000000	64

Applications