BONOMI GROUP

RUBINETTERIE BRESCIANE

TURBO PRESS GAS

533200

PATENTED

“TEE” for gas.

Technical specifications

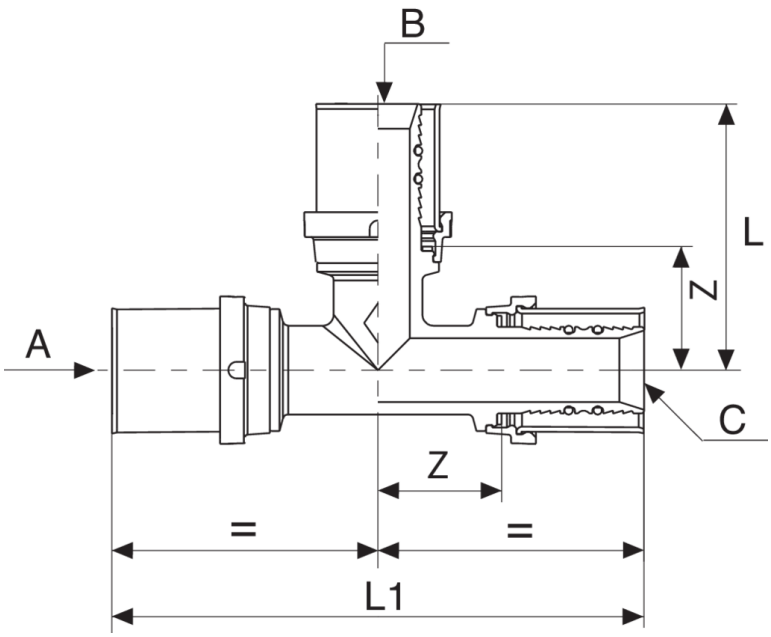

A X B X C	BAG	BOX	MASTER BOX	CODE	SP	L	L1	Z
16 x 16 x 16	5	15	120	53320016	2	44	88	18,5
20 x 20 x 20	5	10	80	53320020	2	48	96	22,5
26 x 26 x 26	2	6	48	53320026	3	57,5	115	26,5
32 x 32 x 32	2	4	32	53320032	3	62	124	29,5

Applications

GAS