MAGNETO

300401

Magnetic dirt separator for condensing boilers, threaded connections according to ISO 228-G 3/4” with double valve.

Technical specifications

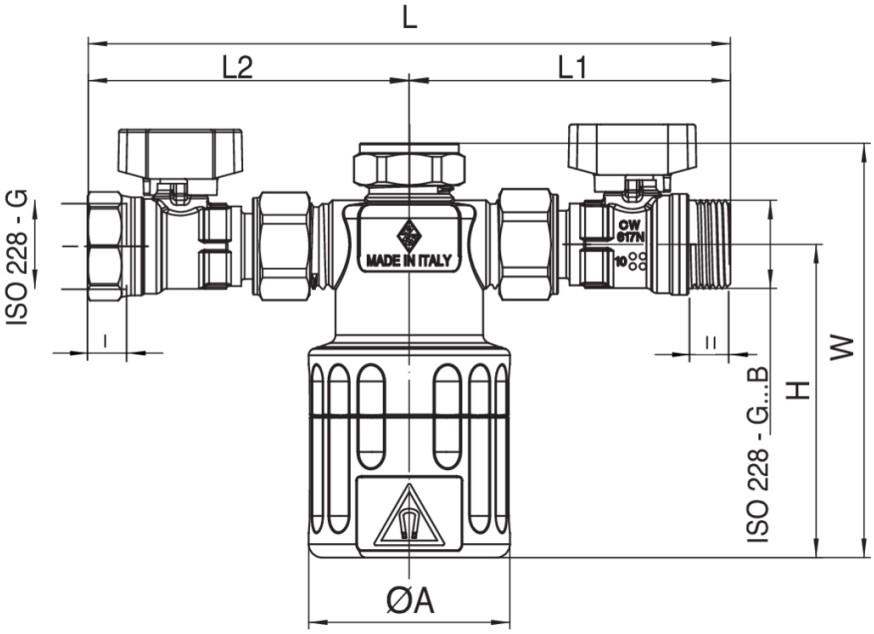

SIZE	DN	BOX	MASTER BOX	CODE	COLORE - COLOR	ØA	L	L1	L2	L	L1	H	W	KV1	KV2	KG
3/4"	20	1	8	30040105	NERO - BLACK	60	190	95	95	12,5	12	93	123	4,8	5	0,54
3/4"	20	1	8	30041105	BIANCO - WHITE	60	190	95	95	12,5	12	93	123	4,8	5	0,54

Temperature range: 0°C +90°C.

Kv^1 Straight flow.

Kv^2 Angle flow.

Applications