BONOMI GROUP

RUBINETTERIE BRESCIANE

FRABO

frabo press KOMBI

RS9270

PATENTED

Copper F/F coupling.

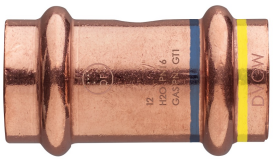

SECURFRABO

Technical specifications

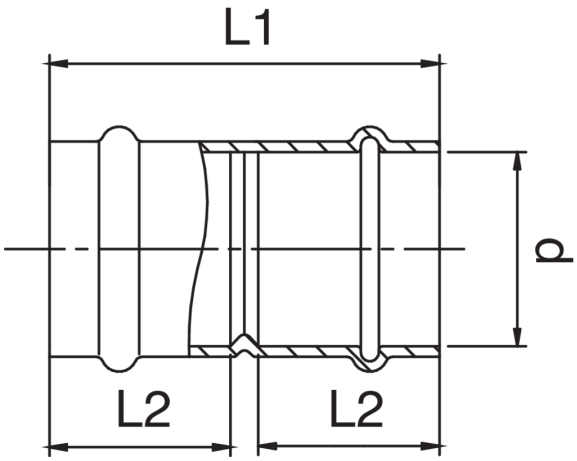

D	BAG	MASTER BOX	CODE	L1	L2
12	10	300	RS9270012012000	40	18
15	10	200	RS9270015015000	49	22
18	10	150	RS9270018018000	52	23
22	10	100	RS9270022022000	53	24
28	10	60	RS9270028028000	57	25
35	5	40	RS9270035035000	62	26
42	5	25	RS9270042042000	78	36
54	1	15	RS9270054054000	93	40

Applications